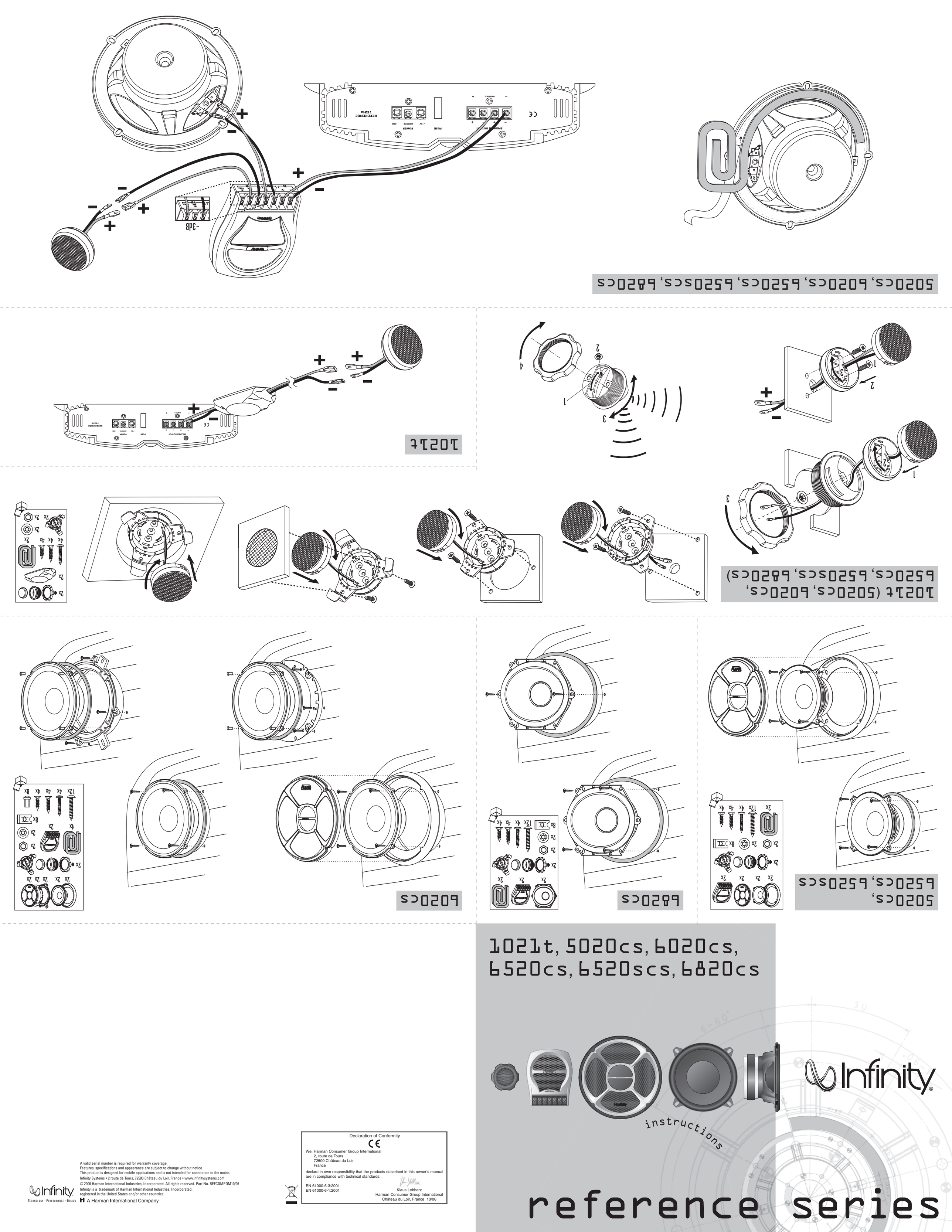
1021t, 5020cs, 6020cs,
6520cs, 6520scs, 6820cs
instructions
reference series
Infinity
1021t
5020cs, 6020cs, 6520cs, 6520scs, 6820cs
5020cs,
6520cs, 6520scs
6020cs
6820cs
-3dB
SPEAKER OUTPUT
FUSE
POWER
REFERENCE
7521a
Declaration of Conformity
We, Harman Consumer Group International
2, route de Tours
72500 Château du Loir
France
declare in own responsibility that the products described in this owner's manual are in compliance with technical standards:
EN 61000-6-3:2001
EN 61000-6-1:2001
Klaus Lebherz
Harman Consumer Group International
Château du Loir, France 10/06
A valid serial number is required for warranty coverage.
Features, specifications and appearance are subject to change without notice.
This product is designed for mobile applications and is not intended for connection to the mains.
Infinity Systems • 2 route de Tours, 72500 Château du Loir, France • www.infinitysystems.com
© 2006 Harman International Industries, Incorporated. All rights reserved. Part No. REFCOMPOM10/06
Infinity is a trademark of Harman International Industries, Incorporated, registered in the United States and/or other countries.
Infinity
TECHNOLOGY • PERFORMANCE • DESIGN
A Harman International Company

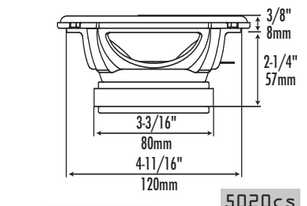

5020cs

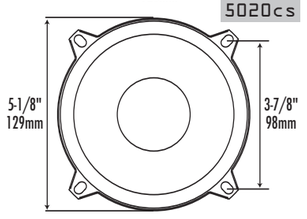

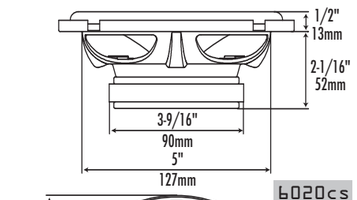

6020cs

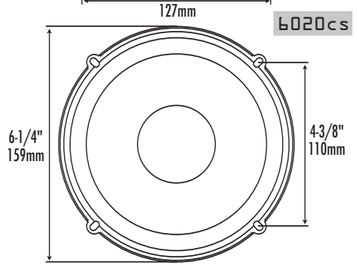

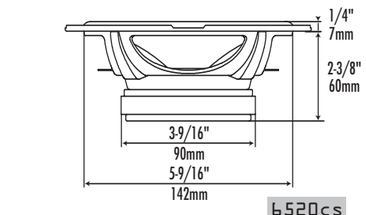

6520cs

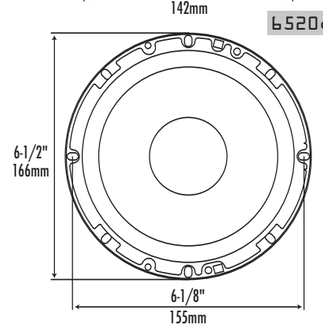

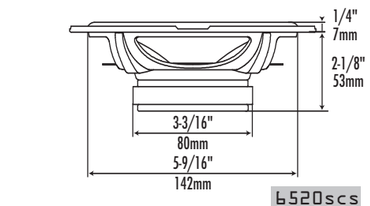

6520scs

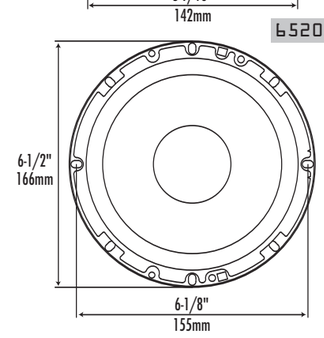

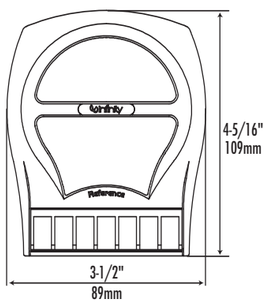

5020cs, 6020cs, 6520cs, 6520scs, 6820cs

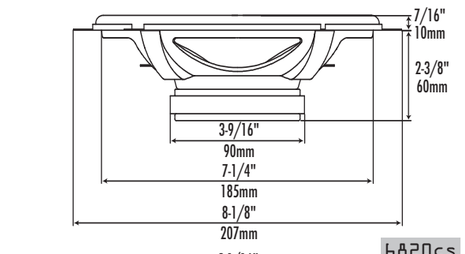

6820cs

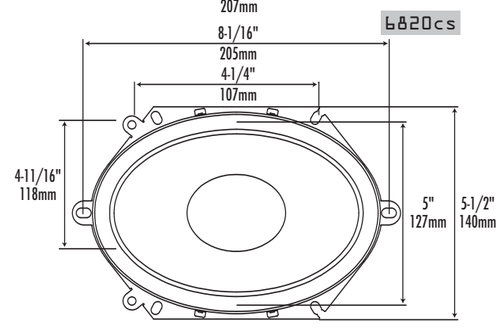

1021t (5020cs, 6020cs, 6520cs, 6520scs, 6820cs)

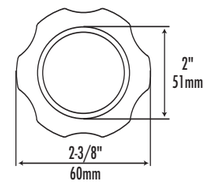

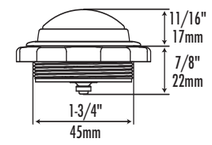

	5020cs	6020cs	6520cs	6520scs	6820cs	1021t
BL (T-m)	3.54	3.80	3.65	3.96	3.59	
DCR (ohms)	2.27	2.13	2.30	2.50	2.12	2.30
Mms (g)	10.86	15.10	13.07	13.37	19.57	
Sd (sq cm)	103.9	132.7	132.7	132.7	178.1	
Cms (µm/N)	528	236	295	228	189	
Vas (l)	8.00	5.84	7.30	5.64	8.42	
Fs (Hz)	66.5	84.3	81.1	91.2	82.8	
Qes	0.82	1.18	1.15	1.22	1.67	
Qms	6.27	6.61	6.92	8.34	5.99	
Qt	0.73	1.00	0.99	1.06	1.31	
1wSPL (dB)	86.5	86.6	87.2	87.4	86.5	
SPL 2.83V	92.0	92.4	92.6	92.4	92.2	

SPECIFICATIONS	5020cs	6020cs	6520cs	6520scs	6820cs	1021t
Type:	5-1/4" 2-Way Component System	6-1/2" 2-Way Component System	165mm 2-Way Component System	165mm Shallow-Mount 2-Way Component System	6" x 8"/5" x 7" 2-Way Component System	1" Component Tweeter
Nominal Impedance:	2.65 Ohms	2.65 Ohms	2.65 Ohms	2.65 Ohms	2.65 Ohms	2.65 Ohms
Power Handling, RMS:	75W	90W	90W	75W	90W	50W
Power Handling, Peak:	225W	270W	270W	225W	270W	150W
Frequency Response:	67Hz – 21kHz	53Hz – 21kHz	58Hz – 21kHz	58Hz – 21kHz	49Hz – 21kHz	2.5kHz – 51kHz
Sensitivity (2.83V, 1m):	92dB	93dB	93dB	93dB	93dB	93dB

GENERAL CARE: The loudspeaker grilles may be cleaned with a damp cloth. Do not use any cleaners or solvents on the grilles or the speaker cones.

WARRANTY: Reference Series speakers are warranted against defects. The duration of the speaker's warranty depends on the laws in the country in which it was purchased. Your local Infinity car audio retailer can help you determine the length of your warranty. To register your product, please visit us at www.infinitysystems.com.

SPECIFICATIONS	5020cs	6020cs	6520cs	6520scs	6820cs	1021t
Type:	5-1/4" 2-Way Component System	6-1/2" 2-Way Component System	165mm 2-Way Component System	165mm Shallow-Mount 2-Way Component System	6" x 8"/5" x 7" 2-Way Component System	1" Component Tweeter
Nominal Impedance:	2.65 Ohms	2.65 Ohms	2.65 Ohms	2.65 Ohms	2.65 Ohms	2.65 Ohms
Power Handling, RMS:	75W	90W	90W	75W	90W	50W
Power Handling, Peak:	225W	270W	270W	225W	270W	150W
Frequency Response:	67Hz – 21kHz	53Hz – 21kHz	58Hz – 21kHz	58Hz – 21kHz	49Hz – 21kHz	2.5kHz – 51kHz
Sensitivity (2.83V, 1m):	92dB	93dB	93dB	93dB	93dB	93dB

GENERAL CARE: The loudspeaker grilles may be cleaned with a damp cloth. Do not use any cleaners or solvents on the grilles or the speaker cones.

WARRANTY: Reference Series speakers are warranted against defects. The duration of the speaker's warranty depends on the laws in the country in which it was purchased. Your local Infinity car audio retailer can help you determine the length of your warranty. To register your product, please visit us at www.infinitysystems.com.